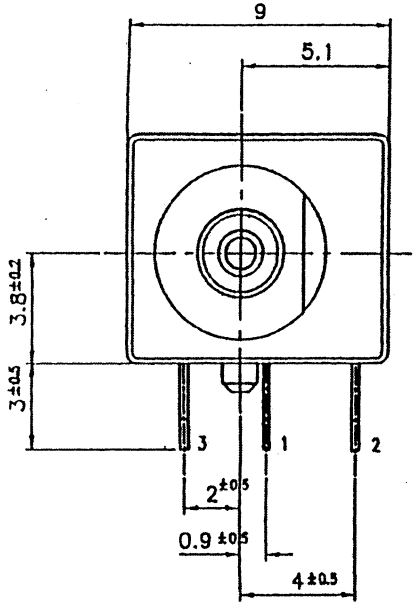

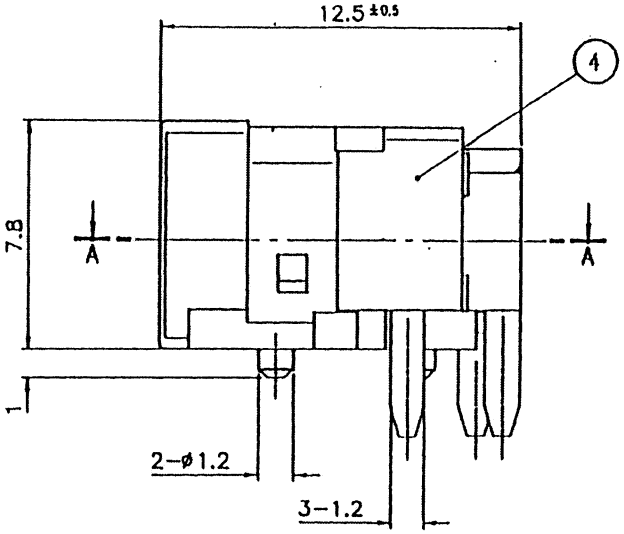

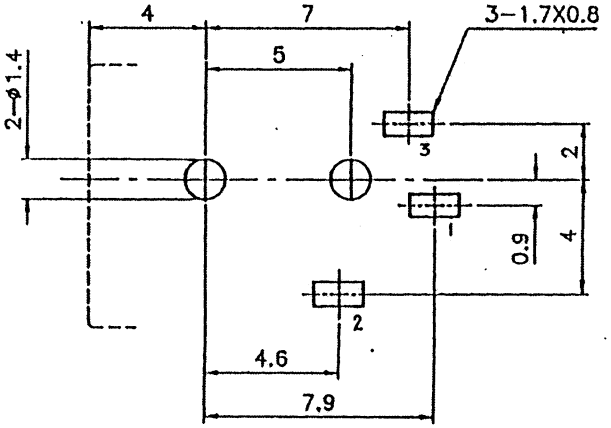

PC BOARD HOLE LAYOUT
(UPPER VIEW FROM DIRECTION OF INSERTION TO PCB)

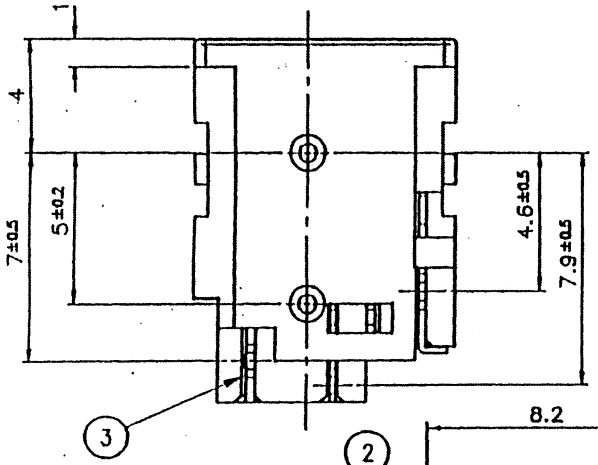

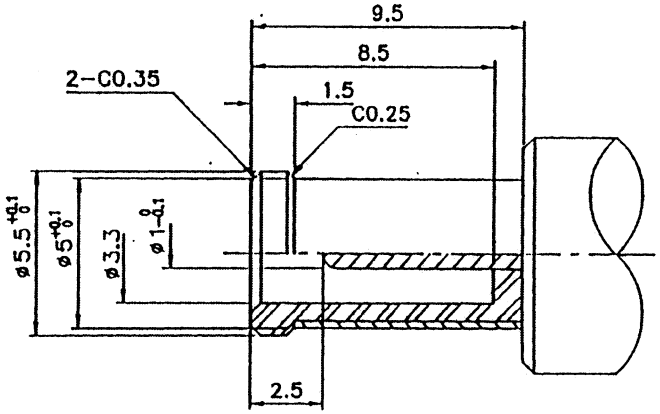

MATE PLUG

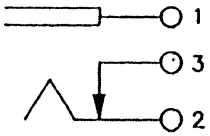

CIRCUIT DIAGRAM

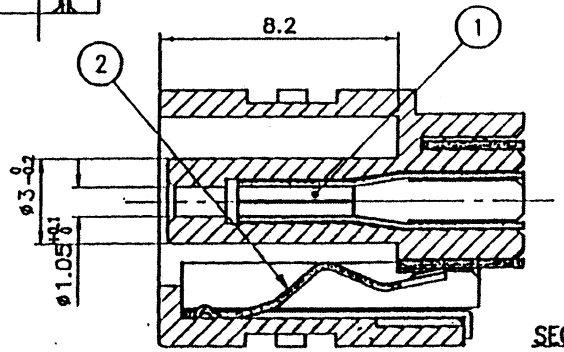

SECTION AA

LET	PART NAME	QTY	MATERIAL		REMARK
4	CASING	1	PC RESIN	BLACK	UL94V-2
3	FIXED TERMINAL	1	BRASS	0.3t	Ag-PLATED
2	TIP SPRING	1	TSB-S11	0.25t	Ag-PLATED
1	EARTH PIN	1	PBs	0.2t	Ag-PLATED

TOLERANCES
X <= 5 = ±0.10
X > 5 = ±0.30
ANGULAR = ±---
DO NOT SCALE DWG.
FINISHED

PART NAME: DC POWER JACK	DWG NO. No. M04-390DJ
MATL: AS SHOWN IN TABLE	SCALE 4/1 mm
DATE 11-5-96	DRN K.F.IM

MARUSHIN ELECTRIC MFG. CO., LTD.